WY1A42

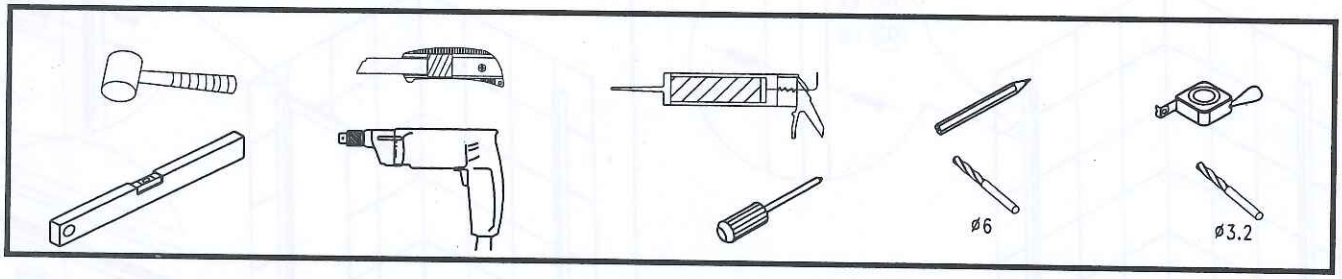

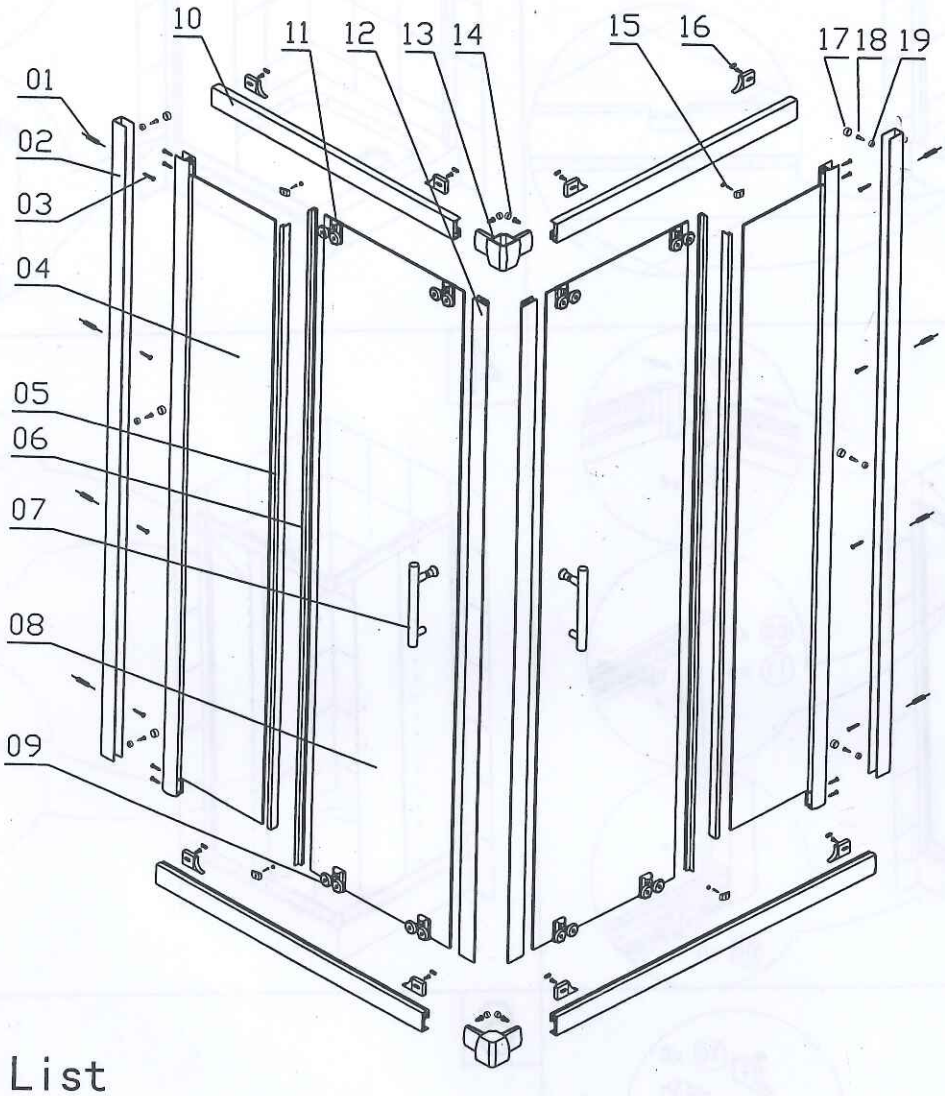

870

Parts List

01 8PCS	02 2PCS	03 ST4*25 16PCS	05 2PCS	06 2PCS
07 2PCS	09 4PCS	10 4PCS	11 4PCS	12 2PCS
13 2PCS	14 ST4*8 4PCS	15 ST4*12 4PCS	16 ST4*10 8PCS	17 6PCS
18 ST4*10 6PCS	19 6PCS			

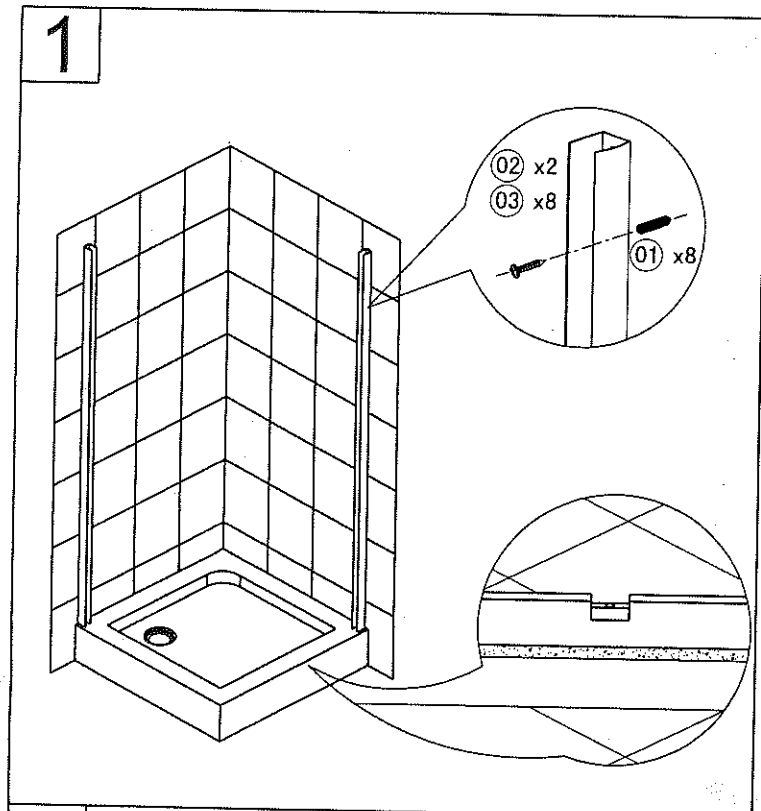
1
02 x2
03 x8
01 x8

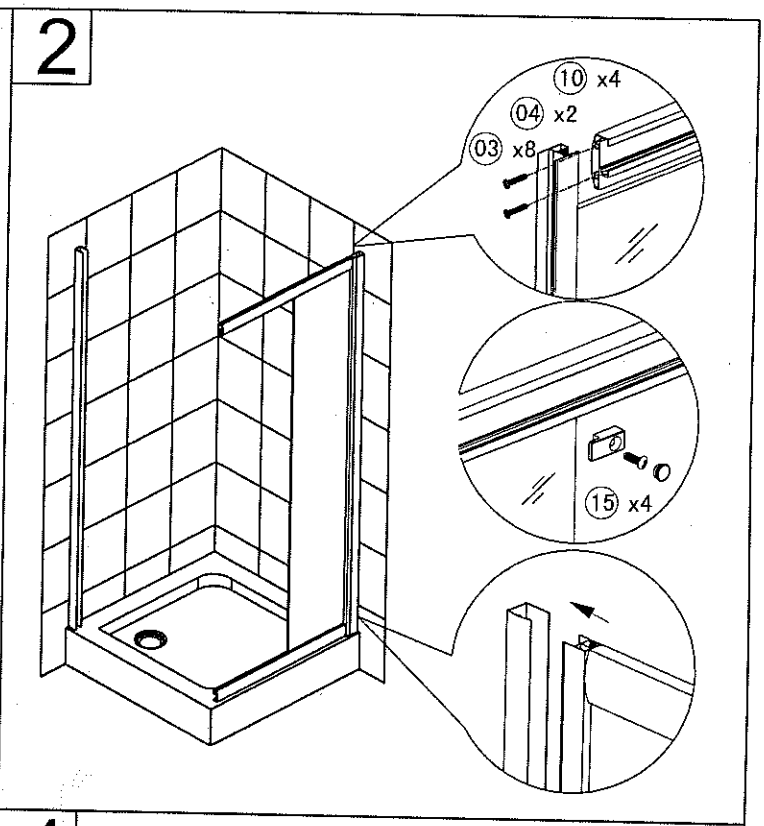
2
10 x4
04 x2
03 x8
15 x4

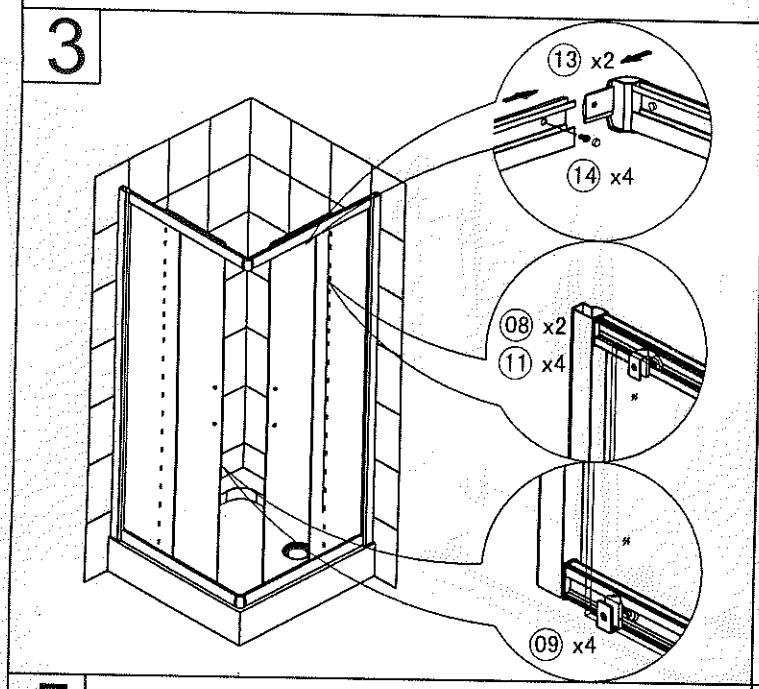
3
13 x2
14 x4
08 x2
11 x4
09 x4

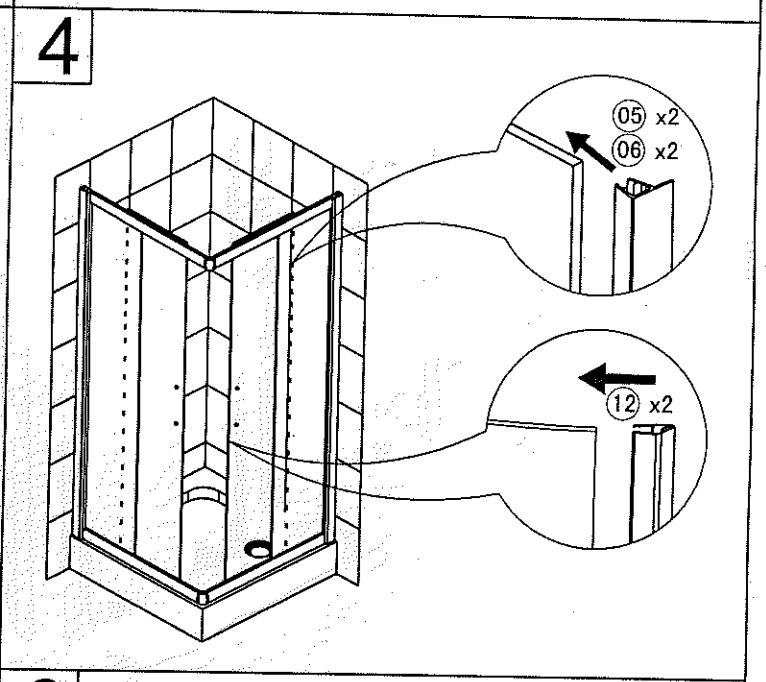
4
05 x2
06 x2
12 x2

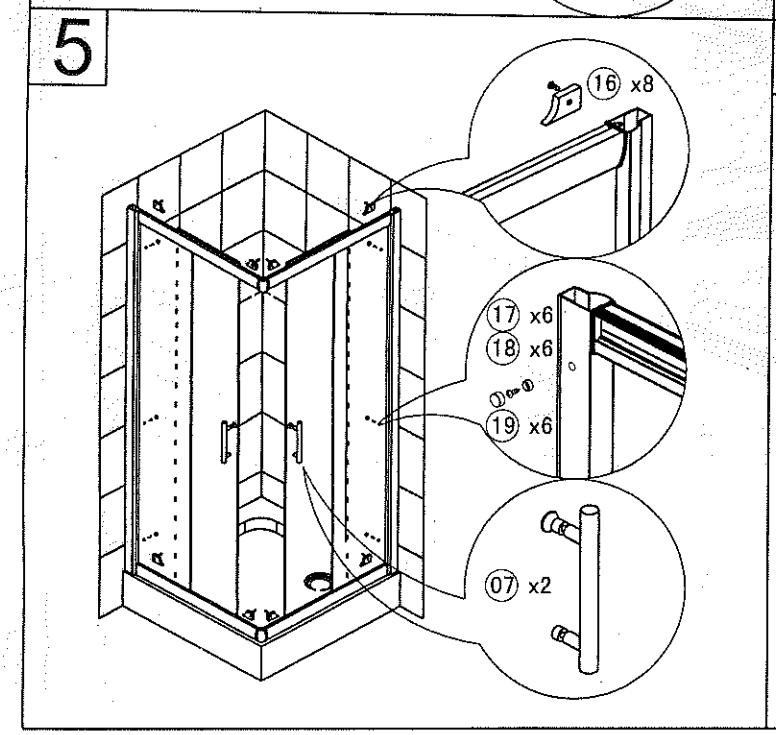
5
16 x8
17 x6
18 x6
19 x6
07 x2

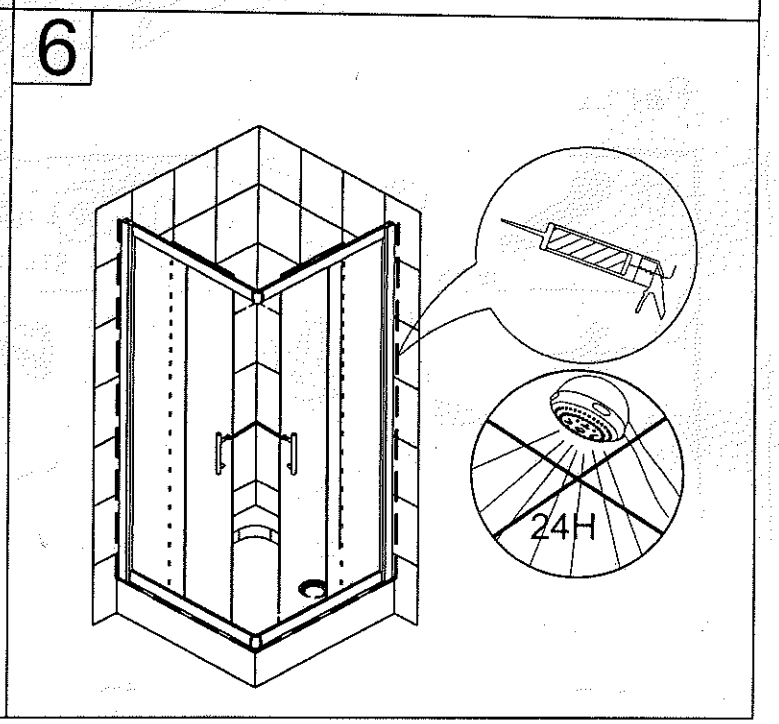
6
24H